Light & Engineering
Vol. 27, No. 5, pp. 112–116, 2019 *https://doi.org/10.33383/2018-013*

APPLICATION OF HIGH-BRIGHTNESS LEDS FOR SIMULTANEOUS MEASUREMENT OF RADIATION SCATTERING AND FLUORESCENCE CHARACTERISTICS IN SEA WATER

Michael Young-gon Lee, Eugene B. Shibanov, and Oleg V. Martynov

Marine Hydrophysical Institute of the Russian Academy of Science, Sevastopol
E-mail: oleg.martynov.49@mail.ru

ABSTRACT

The studies of radiation scattering and fluorescence in sea environment are required for more precise description of radiation behaviour in the upper layers of ocean and diagnostics of environmental condition of seawaters. Application of high-brightness LEDs allowed us to develop a unique method and device for studying of scattering properties and fluorescence of natural waters. Brief descriptions of the device (nephelometer) design and the results of its testing are given. The main advantage of the proposed method is controlled accountancy of the effect of coherent scattering on the results of measurements. Measurements of characteristics of all types of scattering are made by means of one device and using one sample.

Keywords: high-brightness LEDs, nephelometer, radiation scattering by water, fluorescence of natural waters

1. INTRODUCTION

The studies of hydro-optical properties of seawater conducted by the Marine Hydrophysical Institute of the Russian Academy of Science in recent years discovered the imperative necessity of application of new approaches to measurements of radiation scattering indicatrix for explanation of the reasons of incompliance of the clean waters molecular scattering theory with the data of field measurements [1, 2]. The radiation scattering indicatrix data allows us to find such characteristics of suspended material as particle size distribution, to divide it in coarse and fine fraction [3], to find the particles refractive index [4], dependence between the scattering properties of microparticles and their size [5], and to determine the total concentration of suspended material without dividing it into mineral and organic components [6]. Despite the fact that knowledge of the scattering indicatrix has such high relevance for ocean optics, there were not many field measurements of indicatrix due to complexity of designing of equipment for such measurements. The main challenge is that measurement of scattering indicatrix within the whole range of scattering angles requires such radiation sources (RS) which have both very small dimensions of luminous object and very high luminous efficacy. Some high-brightness LEDs, which have appeared over the recent years, not only optimally combine these contradictive requirements but also allow us to select required spectral areas within the range of (350–780) nm.

2. NEW APPROACH TO MEASUREMENTS OF RADIATION SCATTERING ANGULAR FUNCTION AND FLUORESCENCE

The successes in development of semi-conductor radiation sources allow applying tungsten halogen lamps (THL) as RSs in spectral hydrooptical devices to stop. The luminous efficacy of contemporary high-brightness LEDs is higher than that of THLs. Calculations show that application of LED

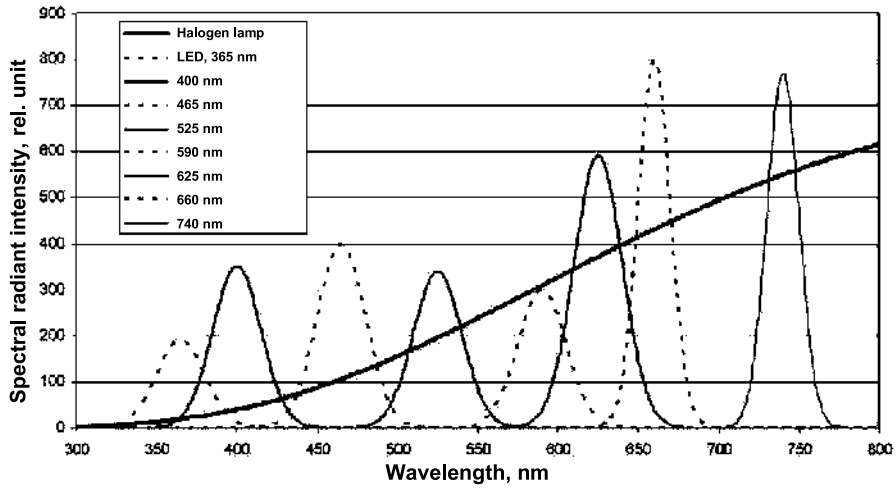

Fig. 1 Relative radiation spectra of LED and THL with correlated colour temperature of 2900K

as RS instead of THL provides ten times higher radiant flux within the same spectral bands and even hundreds of times higher in the short-wavelength region of the spectrum [7]. The LED radiation spectra are relatively narrow (15–35) nm, therefore it is accepted to consider their radiation quasi-monochromatic. Our preliminary evaluation showed that radiance of LEDs is a hundredfold higher than that of the previously used 12W THL. With peak radiation wavelength λ_p decreasing the advantages of LEDs as compared to THL are increasing (Fig. 1).

Application of high-brightness LEDs as RS allowed us to develop a unique method and a device for studying of scattering properties and fluorescence of natural waters. We conducted modernisation of an unique polar nephelometer which allowed significantly to widen its functionality and to provide capability not only to measure scattering indicatrix within the whole range of scattering angles but also fluorescence of different types of phytoplankton cells and dissolved organic matter [7]. The new multi-purpose polar nephelometer for the newest studies of radiation scattering and fluorescence is a third-generation radiation scattering measurement device, which performs angular scan using the periscope operation principle by means of rotation of special glass prism around the axis of photodetector.

As a result of application of high-brightness LEDs as RS, the advanced polar nephelometer achieved a capability to register the signal of non-coherent scattering. For this purpose, the nephelometer radiation unit was supplemented by a special LED changing mechanism and the photodetector unit was supplemented by a computer-controlled filter changing mechanism. If the radiation and transmission spectra are located in one spectral region, the ordinary coherent scattering is measuring, and if they are located in different regions, fluorescence and the Raman scattering are defineding. Availability and the level of ambient illumination are controlled using the angular structure of the measured signal. The new device uses the high design technology and contemporary electronic components. The functional diagram of the device for measurement of volume scattering and fluorescence of different types of phytoplankton cells and dissolved organic matter is shown in Fig. 2.

For the first time in the world practice, this version of nephelometer uses a set of 8 high-brightness

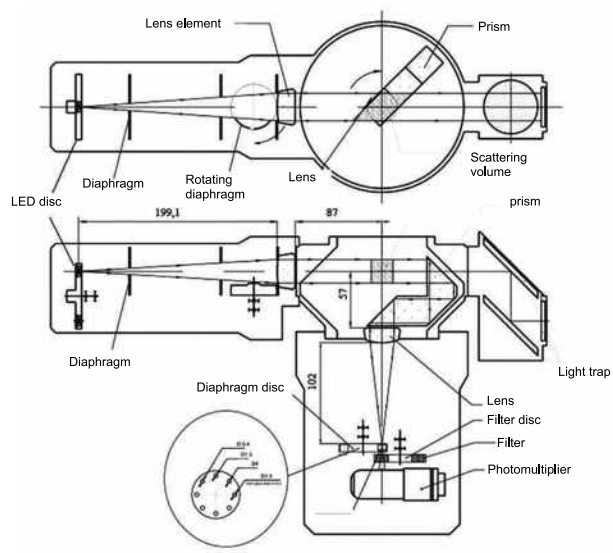

Fig. 2. Principal scheme of measurements of scattering characteristics with the new nephelometer

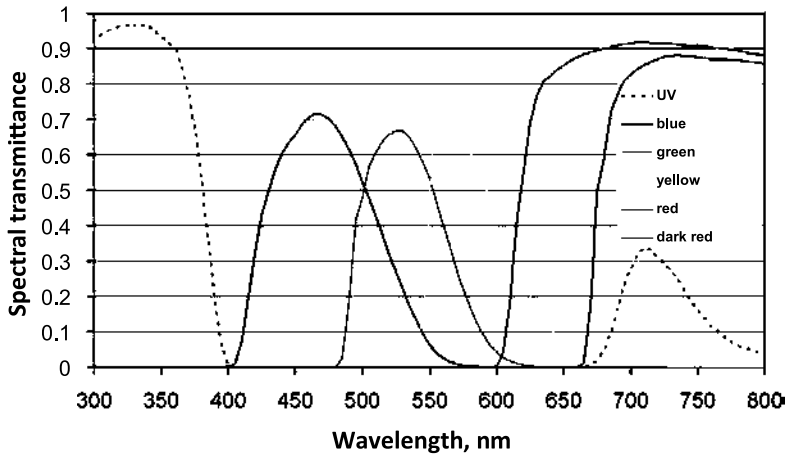

Fig. 3. Relative transmission spectra of filters

narrow-band various-spectrum LEDs with λ_p = 365, 400, 465, 525, 590, 625, 660 and 740 nm and radiation bandwidth from 10 to 20 nm [7]. The LEDs are installed around a circumference over each 45° on a rotational disc, which is a radiator designed as a cylinder with inclined cooling fins. Changing of LEDs is performed using a step engine which turns the radiator with filter for the set angle by a microprocessor signal. Power supply of LEDs is performed by supplying voltage to two spring brushes sliding on the disc collector with eight contact sectors connected with corresponding LEDs which rotates together with the radiator.

These LEDs radiate significantly more than THL, which significantly lowers the random noise of the photomultiplier during measurement of small radiant flux in the region of large scattering angles and low levels of fluorescent glow. The dimensions of the LED luminous object, which are significantly less than those of THL, allow RS beam divergence to decrease and, therefore, to increase angle resolution during measurements of radiation indicatrix. Another significant advantage of application of LEDs is longer service life of RSs based on them. The guaranteed service life of LEDs is 100,000 hours and more, which allows us to use them in optical devices within the whole period of their persistent operation. It is also well-known that changing of a burned-out THL is associated with time-consuming adjustment and calibration of a device, which sometimes lead to loss of data especially during field expeditions. One more advantage of application of LEDs is capability to control radiance and therefore radiance of scattered radiation by changing radiant intensity of LED. Moreover, it is application of high-brightness LEDs which allows us to use the same device for measurement of fluorescent properties of seawater.

To make a polar nephelometer measure both radiation scattering angular function and characteristics of seawater fluorescence, the light detector of the polarimeter should be equipped with a set of filters with transmission maximums adjusted in accordance with λ_p of LEDs. Various combinations of LED and filter pairs allow closely to register both a signal associated with coherent scattering and characteristics of fluorescence at one wavelength with exciting signal at another one. For this purpose, the light detector is supplemented with a set of corresponding filters made of coloured glass (Fig. 3).

Installation of filters opposite to the photomultiplier allows us to control the effects of non-coherent scattering and to measure the fluorescence characteristics.

The Table contains the measured values of the fraction of received coherent radiation and values of effective wavelength for all possible combinations of LEDs and filters in the device. The cells with bolded values should be considered as acceptable ones for measurement of coherent scattering by a combination of a LED and a filter. The combinations of LEDs and filters close to the diagonal of the fluorescence matrix allow to measure the values of coherent scattering. If the fraction of the latter is low, there is a capability in principle to measure the values of non-coherent scattering.

CONCLUSION

Application of contemporary high-brightness LEDs allowed us to develop a unique method and

Table. Calculated Values of Fraction of Received Coherent Radiation and Effective Wavelength

Filter / λ_p, nm	UV	Blue	Green	Yellow	Red	Dark red
365	**0.88; 363 nm**	0.003; 418 nm	$<10^{-5}$	$<10^{-4}$	$<10^{-6}$	$<10^{-6}$
400	0.036; 390 nm	0.018; 412 nm	$<10^{-5}$	0.0001; 400 nm	$<10^{-6}$	$<10^{-6}$
465	$<10^{-6}$	**0.669; 465.1 nm**	0.0223; 496 nm	0.0001; 465 nm	$<10^{-6}$	$<10^{-6}$
525	$<10^{-6}$	**0.283; 516 nm**	**0.592; 525 nm**	0.0648; 554 nm	$<10^{-6}$	$<10^{-6}$
590	$<10^{-6}$	0.003; 565 nm	0.124; 578 nm	**0.51; 586 nm**	0.044; 617 nm	$<10^{-6}$
625	$<10^{-4}$	$<10^{-4}$	0.0106; 604 nm	**0.225 617 nm**	**0.56; 631 nm**	0.0006; 674 nm
660	0.026; 692 nm	$<10^{-6}$	0.0008; 616 nm	0.068; 642 nm	**0.851; 660 nm**	0.176; 685 nm
740	0.217; 732 nm	$<10^{-6}$	$<10^{-6}$	0.0008; 713 nm	**0.919; 739 nm**	**0.879; 739 nm**

a device for studying of scattering properties of natural waters.

The main advantage of the proposed method is controlled accountancy of the effect of coherent scattering. Measurements of characteristics of the two types of scattering are made by means of one device and using one sample.

Another advantage of the nephelometric method is a capability to conduct fluorometric measurements with sufficient approximation relative radiation spectra of RS and transmission spectra of detector filters.

ACKNOWLEDGMENT

The new method was developed under the RFBR project 16–05–00062 “The Research of Spectral Characteristics of Coherent and Non-Coherent Radiation Scattering in Sea Water”.

REFERENCES

1. Shybanov E.B., Burton J.F., Lee M.E., Zibordi G. Hypothesis of the Spatial Adjustment of Optical Inhomogeneities of Water and Its Confirmation through Experiments on Measurements of Light Scattering // JETP Letters. 2010, Vol. 92, # 10, pp. 671–675.

2. Shybanov E.B., Berton J.F., Lee M.E., Zibordi G. Increase of Radiation Scattering with Mixing of Various Density Clean Waters// The Marine Hydrophysical Journal2011, Vol. 4, pp. 36–42.

2. Shybanov E.B., Berton J.F., Lee M.E., Zibordi G. Uvelichenie rasseianiia izlucheniia pri smeshivanii chistykh vod razlichnoi plotnosti // Morskoi gidrofizicheskii zhurnal, 2011, Vol. 4, pp. 36–42.

3. Kopelevich O.V. Small-Parameters Model of Optical Properties of Sea Water // Ocean Optics. Vol. 1. Physical Optics of Ocean// Editor-in-Chief A.S. Monin, Moscow: Nauka, 1983, pp. 208–234.

3. Kopelevich O.V. Maloparametricheskaia model opticheskikh svoistv morskoi vody / Optika okeana. T. 1. Fizicheskaia optika okeana// Editor-in-Chief A.S. Monin, Moscow: Nauka, 1983, pp. 208–234.

4. Twardowski M.S., Boss E., Macdonald J.B., Pegau W.S., Barnard A.H., Zaneveld J.R.V. A model for estimating bulk refractive index from the optical backscattering ratio and the implications for understanding particle composition in case I and case II waters // J. Geophys. Res. 2001, Vol. 106, pp. 14129–14142.

5. Lee M.E., Martynov O.V., Shybanov E.B. Some Results of Measurements of Scattering Indicatrix within the Wide Angular Range in Artificial Media and Natural Waters// Environmental Safety of Coastal and Shelf Zones and Comprehensive Application of Shelf Resources. Edited by V.A. Ivanov. Sevastopol: MGI NANU, 2003, 12p.

5. Lee M.E., Martynov O.V., Shybanov E.B. Nekotorye rezultaty izmerenii indikatris rasseianiia v shirokom diapazone uglov v iskusstvennykh sredakh i prirodnykh vodakh// Ekologicheskaia bezopasnost pribrezhnykh

i shelfovykh zon i kompleksnoe ispolzovanie resursov shelfa. Edited by V.A. Ivanov. Sevastopol: MGI NANU, 2003, 12p.

6. Shifrin K.S. Introduction to Ocean Optics. Leningrad: Gidrometeoizdat, 1983, 280 p.

6. Shifrin K.S. Vvedenie v optiku okeana. Leningrad: Gidrometeoizdat, 1983, 280 p.

7. Lee M.E., Marlon L.R. A New Method for the Measurement of the Optical Volume Scattering Function in the Upper Ocean // JAOT, 2003, Vol. 20, pp. 563–571.

8. Lee M.E. Martynov O.V., Shybanov E.B. The New Principles of Measurement of Scattering Indicatrix within a Wide Range of Angles// Environmental Safety of Coastal and Shelf Zones and Comprehensive Application of Shelf Resources Edited by V.A. Ivanov. Sevastopol: MGI NANU, 2003, pp. 194–211.

8. Lee M.E. Martynov O.V., Shybanov E.B. Novye printsipy izmereniia indikatrisy rasseianiia v shirokom diapazone uglov// Ekologicheskaia bezopasnost pribrezhnykh i shelfovykh zon i kompleksnoe ispolzovanie resursov shelfa. Edited by V.A. Ivanov. Sevastopol: MGI NANU, 2003, pp. 194–211.

9. Karabashev S.G. Ocean Fluorescence // Leningrad: Gidrometeoizdat, 1987, 200 p.

9. Karabshev S.G. Fliuorestsentsiia v okeane// Leningrad: Gidrometeoizdat, 1987, 200 p.

10. Porto S.P.S. Angular Dependence and Depolarization Ratio of the Raman Effect // JOSA, 1966, Vol. 56, No. 11, pp.1585–1589.

11. Lee M.E., Shybanov E.B., Martynov O.V. Advantages of Application of High-Brightness LEDs in Devices for Research of Sea Water Radiation Scattering // Proceedings of the VIII International Conference "Optics of Natural Waters (ONW-2015)" Saint Petersburg,

8–12.09.2015, pp. 267–271.

11. Lee M.Y-G., Shybanov E.B., Martynov O.V. Preimushchestva ispolzovaniia sverkhieiarkikh svetodiodov v priborakh dlia issledovaniia rasseianiia izlucheniia morskoi vodoi// Trudy VIII Mezhdunarodnoi konferentsii " Sovremennye problemy optiki estestvennykh sred (ONW 2015)". Saint Petersburg, 8–12.09.2015, pp. 267–271.

12. Maffione R.A., Dana D.R. Instruments and methods for measuring the backward-scattering coefficient of ocean waters // Appl. Opt. 1997, Vol. 36, pp. 6057–6067.

Michael Young – gon Lee,
Dr. of Physical and Mathematical Sc., Professor, graduated from Leningrad Institute of Precision Mechanics and Optics in 1965. At present, he is Head of the Marine Optics and Biophysics Department of FSBSI "Marine Hydrophysical Institute of Russian Academy of Sciences". Research interests: optical oceanography, remote sensing of the ocean, scattering of light in sea water, expeditionary bio-optical studies, development of instruments for hydrooptic research

Eugene B. Shybanov,
Ph.D. of Physical and Mathematical Sciences. In 1983, graduated from the Moscow Physical and Technical Institute. Senior researcher of the Sea Optics and Biophysics Department of the Marine Hydrophysical Institute of the Russian Academy of Science. Area of scientific research: optical oceanography, remote sensing of ocean, sea water radiation scattering, field bio-optical studies

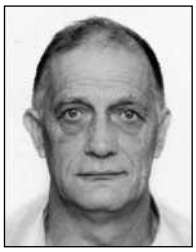

Oleg V. Martynov,
Ph.D. of Technical Sciences. In 1972, graduated from the Sevastopol Instrument-Making Institute. Senior researcher of the Sea Optics and Biophysics Department of the Marine Hydrophysical Institute of the Russian Academy of Science. Research Interests: optical oceanography, hydrooptical instruments, remote sensing of ocean